30" Series 9 Minimal Coffee Maker

Series 9 | Minimal

Black Glass



With refined and minimal design, you can enjoy barista-style coffee at home. Create perfectly crafted coffee from Latte to Macchiato.

- Dial-in your preferred grind, temperature, milk level and strength settings, then save up to six unique profiles
- Programmable timer turns on the Coffee Maker at the ideal time each day
- Intuitive touch display brews a perfect cup of coffee at the touch of a button
- Designed to match our Minimal style appliances, for the ultimate kitchen solution

DIMENSIONS

Height	18 "
Width	29 7/8 "
Depth	18 7/8 "

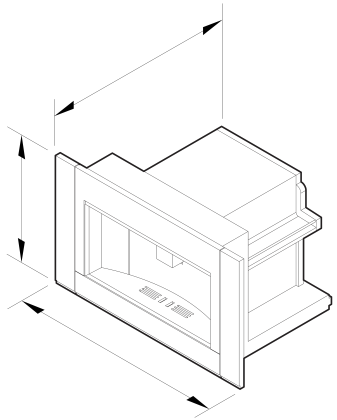

FEATURES & BENEFITS

EVERY POUR PERSONALISED

Create barista-quality coffee at home, with 13 options from Flat White to Macchiato. Tailor each cup to your taste, adjusting grind size, milk level, temperature and strength, then save up to six unique profiles so every pour is crafted to perfection — just the way you like it.

READY WHEN YOU ARE

Wake up to the aroma of freshly brewed coffee, perfectly timed to your morning routine. With programmable settings, your machine can heat, grind and pour automatically at your chosen time, so your coffee is ready just as you are.

EFFORTLESS CLEANING

Enjoy effortless maintenance with a self-cleaning function that keeps your machine pristine. The coffee grounds container and drip tray are simple to remove and empty, making it easy to care for your machine and enjoy every cup at its best.

ENGINEERED FOR EXCEPTIONAL COFFEE

Enjoy expertly crafted coffee at the touch of a button, powered by precision engineering. A stainless steel conical burr grinder with 13 coarseness settings ensures consistent flavour, while 15-bar pump pressure delivers a rich, aromatic crema. The generous 81 fl oz water tank means fewer refills, for uninterrupted enjoyment.

DESIGNED TO MATCH

Designed to complement our Minimal style family of appliances, this Coffee Maker features a black glass finish with refined detailing. Able to be seamlessly built in almost anywhere, our companion products are crafted to align beautifully and install at the height that best suits your kitchen and lifestyle.

SPECIFICATIONS

Accessories (included)

Coffee spoon	•
Descaling agent bottle	•
Extractable steam outlet	•
Water filter	•

Capacity

Coffee bean container capacity	0.75 lbs
Drip tray capacity	0.25 gallons
Grounds container capacity	14 cups of coffee
Number of cups	1 or 2

Cleaning

Easy to remove coffee grinds container	•
Easy to remove stainless steel hot water/ steam pipe	•
Removable drip tray with level indicator	•

Controls

Cleaning reminder	•
High resolution touch display	•
Intuitive information display	•
LED lights	4
r	•
Refill coffee bean reminder	•
Water tank empty indicator	•

Features

Coffee strength levels	5
Cup size levels	4 + manual
Personalised coffee	•
Takes pre ground coffee	•

Functions

Americano	•
Cappuccino	•
Coffee	•
Double espresso	•
Espresso	•
Espresso macchiato	•
Flat white	•
Hot milk	•
Hot water	•
Latte	•
Latte macchiato	•
Long black	•
Number of functions	13

Performance

Coffee temperatures	5 x setting
Grinder	Stainless steel conical burr
Grinding coarseness	13 positions
Heating system	Thermablock with stainless steel tube & steamer
Heating system power (coffee / steam)	1200 W
Integrated cup warmer shelf	•
Integrated storage for accessories	•
Pump power	50 W
Pump pressure	15 bar

Power requirements

Amperage	10 A
Supply frequency	50 Hz
Supply voltage	120 V

Product dimensions

Depth	18 7/8 "
Height	18 "
Width	29 7/8 "

SKU	84219

The product dimensions and specifications in this page apply to the specific product and model. Under our policy of continuous improvement, these dimensions and specifications may change at any time. You should therefore check with Fisher & Paykel's Customer Care Centre to ensure this page correctly describes the model currently available. © Fisher & Paykel Appliances Ltd 2020

Other product downloads available at fisherpaykel.com

- DWG
- DXF
- Planning Guide - 30" Minimal Handleless (English)
- Planning Guide - 30" Minimal (English)
- Planning Guide - 30" Minimal Handleless (Canadian French)
- Planning Guide - 30" Minimal (Canadian French)
- Planning Guide - 30" Minimal Handleless (Spanish)
- Planning Guide - 30" Minimal (Spanish)
- Revit
- Rhino
- Right To Repair Declaration (English, Canadian French)
- SketchUp
- Installation Guide (English)
- User Guide (English)
- User Guide (Canadian French)
- Installation Guide (Canadian French)

Where applicable:

All appliances use energy, and energy usage typically generates carbon emissions. **Fisher & Paykel Appliances' In-use Energy Carbon Emissions Estimate** indicates carbon emissions from a product's in-use energy. This is calculated either annually or per cycle, using the product's market-specific energy label energy consumption data multiplied by the carbon emissions factor for energy in your country or region.

Our In-use Energy Carbon Emissions Estimate is designed to assist customers in making informed purchasing decisions when comparing different Fisher & Paykel products. For example, a heat pump dryer typically has a lower In-use Energy Carbon Emissions Estimate than a vented dryer.



A PEACE OF MIND SALE
24 Hours 7 Days a Week Customer Support

T 1.888.936.7872 Wwww.fisherpaykel.com