Series 9, Integrated Single DishDrawer Dishwasher

Integrated

Integrating into your kitchen design seamlessly, each drawer fits a half load that you can load and wash independently.

- Knock to pause function is perfect if you miss a dish
- Six wash programs, as well as additional Quick wash, Sanitise and Extra Dry options
- Flexible racking can be folded down to fit bigger dishes
- Customise with your own front panel and handle to match your kitchen cabinetry, or choose our stainless steel panel

DIMENSIONS

Height	410 mm
Width	599 mm
Depth	553 mm

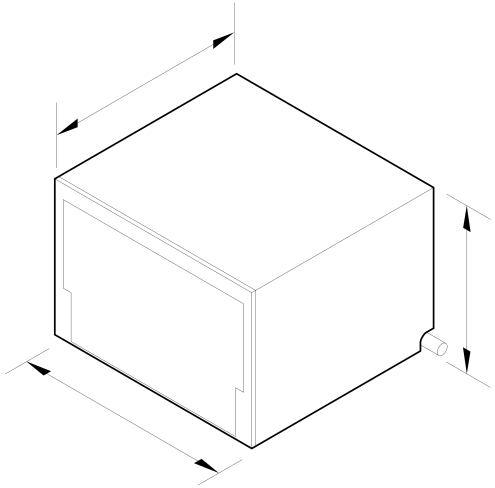

FEATURES & BENEFITS

Seamless Integration

Slide your DishDrawer™ Dishwasher into an existing kitchen space or integrate into kitchen cabinetry, for a seamless look whilst delivering superior dish care.

Ease Of Use

DishDrawer™ Dishwashers are as easy to open and close as kitchen drawers and can be conveniently positioned at bench height for ease of loading and minimal bending. Flexible racking allows you to make adjustments to fit in a variety of dishes.

QUICK, SANITISE AND EXTRA DRY OPTIONS

The Quick wash modifier delivers a faster wash while maintaining performance. The Sanitise option provides extra protection killing 99.9% of bacteria in the final rinse. The Extra Dry setting is perfect for plastic dishes.

Knock To Pause

These DishDrawer™ Dishwashers have a knock to pause function. A knock on the front panel will pause the dishwasher which can be re-started again by using the start/play button.

Quiet Performer

Running at a very low decibel rate, these DishDrawer™ Dishwashers do their job without making a fuss. The combination of intelligent technology and simple mechanics means greater reliability and excellent wash performance.

SPECIFICATIONS

Accessories (included)

Cutlery basket	•
Knife clip and multipurpose clip	•

Accessories (sold separately)

Door panel black stainless steel	ADDD60SPB
Door panel recessed handle black stainless steel	ADDD60STNB
Door panel recessed handle matte black glass	ADDD60STZB
Door panel recessed handle stainless steel	ADDD60STNX
Door panel stainless steel	ADDD60SPX
Handle kit Classic	AHCL-DDDW-60X
Handle kit Contemporary round, aluminium	AHS-OBDD-60S
Handle kit Contemporary square fine, aluminium	AHD5-OBDD-60SX
Handle kit Contemporary square fine, black	AHD5-OBDD-60SB
Handle kit Contemporary square, aluminium	AHD3-OBDD-60S
Handle kit Contemporary square, black	AHD3-OBDD-60B

Capacity and loading

Accommodates round plates up to	280mm
Adjustable height, foldable cupracks	•
Fold down tines	•
Pitch adjustable tines	•
Place settings	6

Connected Features

Alerts and notifications	•
Education and onboarding	•
Monitoring	•
Software updates	•

Consumption

Energy rating	F
Energy usage	61kWh/100 cycles
In-use energy carbon emissions estimate	17.4kgCO2e/100 cycles
Water usage (per wash cycle)	7.9L

Controls

Electronic fault/Diagnostic indicator	•
End of cycle beeps	•
Energy saving delay start option of up to 12 hours	•
Internal wash selector	•
Keylock	•
Knock to pause	•
Rinse aid indicator light	•
Smart appliance	•

Features

Built-in water softener	•
Fan assisted drying	•
Flood protection	•
Flow through detergent dispenser	•
Motor type	BLDC
Quiet operation	•
SmartDrive™ technology	•

Performance

Noise emissions	43 dBA

Power requirements

Dedicated Circuit (A)	5A
Supply frequency	50 Hz
Voltage	220 - 240V

Product dimensions

Depth	553 mm
Height	410 mm
Width	599 mm

Wash Program Modifiers

Extra Dry	•
Quick	•
Sanitise	•
Wash modifiers	3

Wash Programs

Delicate	•
Eco	•
Fast	•
Heavy	•
Medium	•
Rinse	•
Wash programs	6

Water connection

Water pressure	100kPa - 1000kPa
Water supply	3/4" BSP (20mm) Connector Water Inlet Hose

SKU	82353

The product dimensions and specifications in this page apply to the specific product and model. Under our policy of continuous improvement, these dimensions and specifications may change at any time. You should therefore check with Fisher & Paykel's Customer Care Centre to ensure this page correctly describes the model currently available. © Fisher & Paykel Appliances Ltd 2020

Other product downloads available at fisherpaykel.com

- DXF
- Care & Maintenance Guide (English)
- Declaration of Conformity (English)
- DWG
- Energy Label
- First Use Guide (English)
- Installation Guide (English)
- Installation Guide (English)
- Planning Guide (English)
- Product Information Sheet

- Revit
- Rhino
- Rhino - Door and Contemporary Square Handle
- Safety & Warnings (English)
- SketchUp
- SketchUp - Door and Contemporary Square Handle
- Wash Program Data (English)
- Installation Video

Where applicable:

All appliances use energy, and energy usage typically generates carbon emissions. **Fisher & Paykel Appliances' In-use Energy Carbon Emissions Estimate** indicates carbon emissions from a product's in-use energy. This is calculated either annually or per cycle, using the product's market-specific energy label energy consumption data multiplied by the carbon emissions factor for energy in your country or region.

Our In-use Energy Carbon Emissions Estimate is designed to assist customers in making informed purchasing decisions when comparing different Fisher & Paykel products. For example, a heat pump dryer typically has a lower In-use Energy Carbon Emissions Estimate than a vented dryer.

24/7

A PEACE OF MIND SALE
24 Hours 7 Days a Week Customer Support

T 1800 625174 **W**www.fisherpaykel.com