Series 9, Contemporary Tall Single DishDrawer Dishwasher

Contemporary



Created with extra height for large dishes and designed to be placed anywhere in your kitchen, for loading dishes with less bending.

- With extra height for taller dishes, and customisable internal shelving
- Six wash programs, as well as additional Quick wash, Sanitise and Extra Dry options

DIMENSIONS

Height	478 mm
Width	599 mm
Depth	573 mm

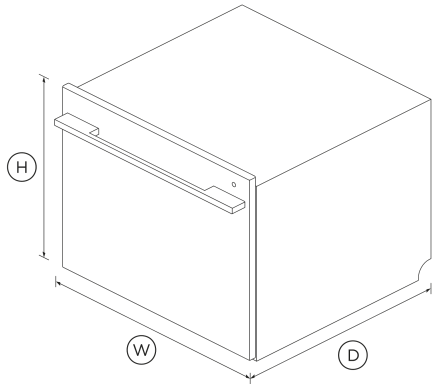

FEATURES & BENEFITS

Ease Of Use

DishDrawer™ Dishwashers are easy to open and close and can be positioned at bench height for effortless loading and minimal bending. Flexible racking allows you to make adjustments to fit in all kinds of dishes.

Quick, Sanitize And Extra Dry Options

The Quick wash modifier delivers a faster wash while maintaining performance. The Sanitise option provides extra protection killing 99.9% of bacteria in the final rinse. The Extra Dry setting is perfect for plastic dishes.

Quiet Performer

Running at a very low decibel rate, these DishDrawer™ Dishwashers do their job without making a fuss. The combination of intelligent technology and simple mechanics means greater reliability and excellent wash performance.

Beauty Of Choice

As much a design component as a high performance appliance, the black DishDrawer™ Dishwasher brings a touch of sophistication to your kitchen, on its own or part of a matching kitchen appliance set.

SPECIFICATIONS

Accessories (included)

Cutlery basket	•
Kickstrip	true
Knife clip and multipurpose clip	•

Capacity and loading

Accommodates round plates up to	310mm
Adjustable height, foldable cupracks	•
Fold down tines	•
Pitch adjustable tines	•
Place settings	7

Connected Features

Alerts and notifications	•
Cyber security updates until	04 / 03 / 2028
Education and onboarding	•
Monitoring	•
Software updates	•

Consumption

Energy rating	3.5 star
Energy usage	136kWh/year
In-use energy carbon emissions estimate	83.0kgCO2e/year
Water consumption (per wash cycle)	6.9L
Water rating	4.5 star (WELS)

Controls

End of cycle beeps	•
Energy saving delay start option of up to 12 hours	•
Internal wash selector	•
Keylock	•
Rinse aid indicator light	•
Smart appliance	•

Features

Fan assisted drying	•
Flood protection	•
Flow through detergent dispenser	•
Quiet operation	•
SmartDrive™ technology	•

Performance

Noise emissions	42 dBA

Power requirements

Dedicated Circuit (A)	5A
Supply frequency	50 Hz
Voltage	220 - 240V

Product dimensions

Depth	573 mm
Height	478 mm
Width	599 mm

Wash Program Modifiers

Extra Dry	•
Quick	•
Sanitise	•
Wash modifiers	3

Wash Programs

Delicate	•
Eco	•
Fast	•
Heavy	•
Medium	•
Rinse	•
Wash programs	6

Water connection

Water pressure	30kPa - 1000 kPa
Water supply	3/4" BSP (20mm) Connector Water Inlet Hose

SKU	82327

The product dimensions and specifications in this page apply to the specific product and model. Under our policy of continuous improvement, these dimensions and specifications may change at any time. You should therefore check with Fisher & Paykel's Customer Care Centre to ensure this page correctly describes the model currently available. © Fisher & Paykel Appliances Ltd 2020

Other product downloads available at fisherpaykel.com

- Care & Maintenance (English)
- Energy Label
- First Use (English)
- Installation Guide (English)
- Revit
- Rhino
- SketchUp
- Wash Program Data (English)
- Installation Video

Where applicable:

All appliances use energy, and energy usage typically generates carbon emissions. **Fisher & Paykel Appliances' In-use Energy Carbon Emissions Estimate** indicates carbon emissions from a product's in-use energy. This is calculated either annually or per cycle, using the product's market-specific energy label energy consumption data multiplied by the carbon emissions factor for energy in your country or region.

Our In-use Energy Carbon Emissions Estimate is designed to assist customers in making informed purchasing decisions when comparing different Fisher & Paykel products. For example, a heat pump dryer typically has a lower In-use Energy Carbon Emissions Estimate than a vented dryer.

24/7

A PEACE OF MIND SALE
24 Hours 7 Days a Week Customer Support

T 1300 650 590 Wwww.fisherpaykel.com