# 24" Series 9 Integrated Beverage Center

Series 9 | Integrated

Panel Ready | Left hinge

Elevate your beverage storage with our panel-ready Integrated Beverage Center. Ideal for wine, craft beer and more, it's perfect for any space within your home.

- Integrates into any setting within the home, from the bar to the master suite – the choices are endless
- Spacious 4.6 cu ft capacity, with full-depth wine shelf that can accommodate up to seven bottles
- Adjustable temperature control helps to keep drinks at the ideal temperature
- Designed to fit flush, with only 3/16” gaps and no visible hinges or grilles

## DIMENSIONS

| | |
|---|---|
| Height | 34 - 35 7/16 " |
| Width | 23 5/16 " |
| Depth | 22 11/16 " |

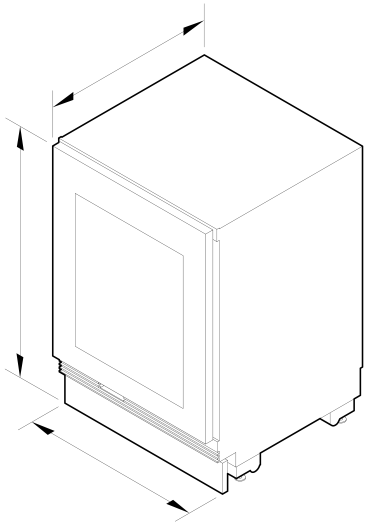

## FEATURES & BENEFITS

### Complete Design Freedom

This versatile under-counter beverage center brings increased cooling capability to any space, from kitchens to home bars, rumpus rooms to home cinemas. Compact and stylish, it carefully stores a selection of beverages, from cans to beer bottles or up to seven bottles of wine in a custom rack. Pair it perfectly with our under-counter wine cabinet to create an entertainer's dream set-up.

### Customized Drink Storage

The beverage center is designed to store a selection of beverages, from cans to beer bottles, or bottles of wine in a custom rack. Full extension shelving makes it simple to see and select between a pale ale or pilsner, sauvignon blanc or chardonnay.

### Flexible Storage

The beverage rack includes a slidable shelf divider that moves to securely hold bottles and cans to avoid tipping, or can be removed for large items. The custom wine rack carefully cradles and displays up to seven bottles of wine.

### Precise Temperature Control

Set the temperature in each zone to between 34°F and 57°F depending on your needs, or use one of our five preset modes: Fridge, Beverage, Sparkling, White Wine or Pantry to store a range of drinks at the ideal temperature.

### Seamless Fit

The beverage centre is designed to fit flush, with only 3/16” gaps between surrounding cabinetry, and no visible hinges or grilles.

### Intuitive Control

Temperature control at your fingertips. Adjust the temperature of your beverage center through intuitive touch controls, or remotely using the SmartHQ™ app through to Wi-Fi connectivity.

### Design Flexibility

This panel-ready model means you can hide your beverage center seamlessly behind your custom cabinetry for more flexibility, or choose to draw attention with our optional stainless steel door panel. Also available is a model with a tempered glass door, allowing visibility into your refrigerator.

## SPECIFICATIONS

### Accessories (included)

| | |
|---|---|
| Hinge change (from left hinge to right hinge) | Included |

### Accessories (sold separately)

| | |
|---|---|
| Door panel set stainless steel | Left hinge (Solid) RD2435L, Right hinge (Solid) RD2435R |
| Handle kit Classic | AHCLRD35 |
| Handle kit Contemporary round | AHD7RD35X |
| Handle kit Contemporary round, aluminium | AHSRD35 |
| Handle kit Contemporary square fine, aluminium | AHD5RD35 |
| Handle kit Contemporary square fine, black | AHD5RD35B |
| Handle kit Minimal rectangular, black | AHM1RD35B |
| Handle kit Professional round flush | AHP3RD35 |
| Joiner Kit | AJRS35LR |
| Toe kick stainless steel 23" | AKRS2304 |
| Toe kick stainless steel 24" | AKRS2304 |
| Toe kick stainless steel 47" | AKRS4704 |

## Capacity

| | |
|---|---|
| Volume | 4.6 cu ft |

## Connected Features

| | |
|---|---|
| Alerts and notifications | • |
| Education and onboarding | • |
| Remote operation | • |
| Software updates | • |

## Consumption

| | |
|---|---|
| Energy rating | Energy star Most efficient |
| Energy usage | 106kWh/year |
| In-use energy carbon emissions estimate | 37.4kgCO2e/year |
| integratedEnergyConsumption | 106 kWh/year |

## Controls

| | |
|---|---|
| Electronic interface | • |
| Interior light | • |

## Features

| | |
|---|---|
| Cantilevered glass shelves | 1 |
| Door alarm | • |
| Front levelling feet | • |
| Full extension beverage shelf | • |
| Full extension wine storage rack | • |
| LED lighting | • |
| Smart appliance | • |
| SmartTouch interface at counter height | • |
| Variable temperature control | • |

## Installation Dimensions

| | |
|---|---|
| Minimum inside width of cabinetry frame | 23 5/8 " |
| Minimum internal depth of cabinetry | 24 " |
| Minimum internal height of cabinetry | 34 " |

## Performance

| | |
|---|---|
| ActiveSmart™ technology | • |
| Adaptive defrost | • |
| Frost free | • |
| Noise emissions | 31 dBA |
| Refrigerator temperature range | 36 - 57 degrees Fahrenheit |
| Sabbath mode | • |
| Variable temperature zones | 1 |

## Power Requirements

| | |
|---|---|
| Rated current | 10 A |
| Supply frequency | 60 Hz |
| Supply voltage | 115 V |

## Product Dimensions

| | |
|---|---|
| Depth | 22 11/16 " |
| Height | 34 - 35 7/16 " |
| Width | 23 5/16 " |

| | |
|---|---|
| SKU | 26707 |

The product dimensions and specifications in this page apply to the specific product and model. Under our policy of continuous improvement, these dimensions and specifications may change at any time. You should therefore check with Fisher & Paykel's Customer Care Centre to ensure this page correctly describes the model currently available. © Fisher & Paykel Appliances Ltd 2020

Other product downloads available at fisherpaykel.com

- DXF
- DXF
- DXF
- DWG
- DWG
- Energy Label
- Installation Guide (English)
- Installation Guide (Canadian French)
- Installation Guide (Spanish)
- Planning Guide (English)
- Planning Guide - Assisted Opening Accessory (Canadian French)
- Planning Guide (Canadian French)
- Planning Guide (Spanish)

- California Warning Proposition 65 (English, Spanish, Canadian French, Chinese)
- Revit
- Rhino
- Right To Repair Declaration (English, Canadian French)
- SketchUp
- User Guide (English)
- User Guide (Canadian French)
- User Guide (Spanish)

Where applicable:

All appliances use energy, and energy usage typically generates carbon emissions. **Fisher & Paykel Appliances' In-use Energy Carbon Emissions Estimate** indicates carbon emissions from a product's in-use energy. This is calculated either annually or per cycle, using the product's market-specific energy label energy consumption data multiplied by the carbon emissions factor for energy in your country or region.

Our In-use Energy Carbon Emissions Estimate is designed to assist customers in making informed purchasing decisions when comparing different Fisher & Paykel products. For example, a heat pump dryer typically has a lower In-use Energy Carbon Emissions Estimate than a vented dryer.

24/7

A PEACE OF MIND SALE
24 Hours 7 Days a Week Customer Support

T 1.888.936.7872 Wwww.fisherpaykel.com