60cm Series 9 Integrated Beverage Centre

Integrated

Elevate your drinks storage with our Integrated Beverage Centre. Ideal for wine, craft beer and more, it's perfect for any space within your home.

- Integrates into any setting within the home, from the bar to the master suite – the choices are endless
- Spacious 129L capacity, with full-depth wine shelf that can accommodate up to seven bottles
- Adjustable temperature control helps to keep drinks at the ideal temperature
- Designed to fit flush, with 4mm gaps and no visible hinges or grilles

DIMENSIONS

Height	864 - 900 mm
Width	592 mm
Depth	579 mm

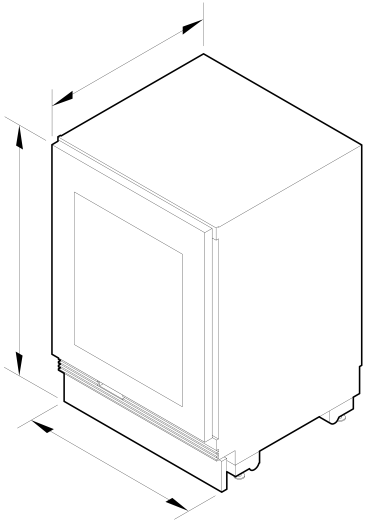

FEATURES & BENEFITS

Complete Design Freedom

This versatile under-counter beverage centre brings increased cooling capability to any space, from kitchens to home bars, rumpus rooms to home cinemas. Compact and stylish, it carefully stores a selection of beverages, from cans to beer bottles or up to seven bottles of wine in a custom rack. Pair it perfectly with our under-counter wine cabinet to create an entertainer's dream set-up.

Customised Drink Storage

The beverage centre is designed to store a selection of beverages, from cans to beer bottles, or bottles of wine in a custom rack. Full extension shelving makes it simple to see and select between a pale ale or pilsner, sauvignon blanc or chardonnay.

Flexible Storage

The beverage rack includes a slideable shelf divider that moves to securely hold bottles and cans to avoid tipping, or can be removed for large items. The custom wine rack carefully cradles and displays up to seven bottles of wine.

Precise Temperature Control

Set the temperature in each zone to between 2°C and 14°C depending on your needs, or use one of our five preset modes: Fridge, Beverage, Sparkling, White Wine or Pantry to store a range of drinks at the ideal temperature.

Seamless Fit

The beverage centre is designed to fit flush, with only 4mm gaps between surrounding cabinetry, and no visible hinges or grilles.

Intuitive Control

Temperature control at your fingertips. Adjust the temperature of your beverage centre through intuitive touch controls, or remotely using the SmartHQ™ app through Wi-Fi connectivity.

Custom Door

A tempered glass door allows you to monitor your drinks selection and restock when necessary. Also available is a panel-ready model, which allows your beverage centre to be hidden seamlessly behind your custom cabinetry.

SPECIFICATIONS

Accessories (included)

Hinge change (from left hinge to right hinge) •

Accessories (sold separately)

Door panel set stainless steel	Left hinge (Framed) RD6009VL, Right hinge (Framed) RD6009VR
Handle kit Classic	AHCLRD09
Handle kit Contemporary round, aluminium	AHSRD09
Handle kit Contemporary square fine, aluminium	AHD5RD09
Handle kit Contemporary square fine, black	AHD5RD09B
Handle kit Contemporary square, aluminium	AHD7RD09X
Handle kit Minimal rectangular, black	AHM1RD09B
Handle kit Professional round flush	AHP3RD09
Joiner kit	AJRS09LR
Toe kick stainless steel 1200mm	AKRS12010
Toe kick stainless steel 600mm	AKRS06010

Capacity

Volume	129 L

Connected Features

Alerts and notifications	•
Education and onboarding	•
Remote operation	•
Software updates	•

Consumption

Energy rating	5 star
Energy usage	71 kWh/year
In-use energy carbon emissions estimate	6.7kgCO2e/year

Controls

Electronic interface	•
Interior light	•

Features

Cantilevered glass shelves	1
Door alarm	•
Full extension beverage shelf	•
Full extension wine storage rack	•
LED lighting	•
Smart appliance	•
SmartTouch control panel	•
Variable temperature control	•

Performance

ActiveSmart™ technology	•
Adaptive defrost	•
Frost free	•
Noise emissions	31 dBA
Refrigerator temperature range	2-14 degrees Celsius
Sabbath mode	•

Power requirements

Rated current	10 A
Supply frequency	50 Hz
Supply voltage	220-240 V

Product dimensions

Depth	579 mm
Height	864 - 900 mm
Width	592 mm

SKU	26702

The product dimensions and specifications in this page apply to the specific product and model. Under our policy of continuous improvement, these dimensions and specifications may change at any time. You should therefore check with Fisher & Paykel's Customer Care Centre to ensure this page correctly describes the model currently available. © Fisher & Paykel Appliances Ltd 2020

Other product downloads available at fisherpaykel.com

- DXF
- DWG
- Energy Label
- Installation Guide (English)
- Installation Guide (English)
- Planning Guide - Assisted Opening Accessory (English)
- Planning Guide (English)
- Revit
- Rhino
- SketchUp
- User Guide (English)

Where applicable:

All appliances use energy, and energy usage typically generates carbon emissions. **Fisher & Paykel Appliances' In-use Energy Carbon Emissions Estimate** indicates carbon emissions from a product's in-use energy. This is calculated either annually or per cycle, using the product's market-specific energy label energy consumption data multiplied by the carbon emissions factor for energy in your country or region.

Our In-use Energy Carbon Emissions Estimate is designed to assist customers in making informed purchasing decisions when comparing different Fisher & Paykel products. For example, a heat pump dryer typically has a lower In-use Energy Carbon Emissions Estimate than a vented dryer.

24/7

A PEACE OF MIND SALE
24 Hours 7 Days a Week Customer Support

T 0800 372 273 Wwww.fisherpaykel.com